0 603 307 703
Stand } ~~99-01~~
Issue } 06-11-07

Fig./Abb. 1

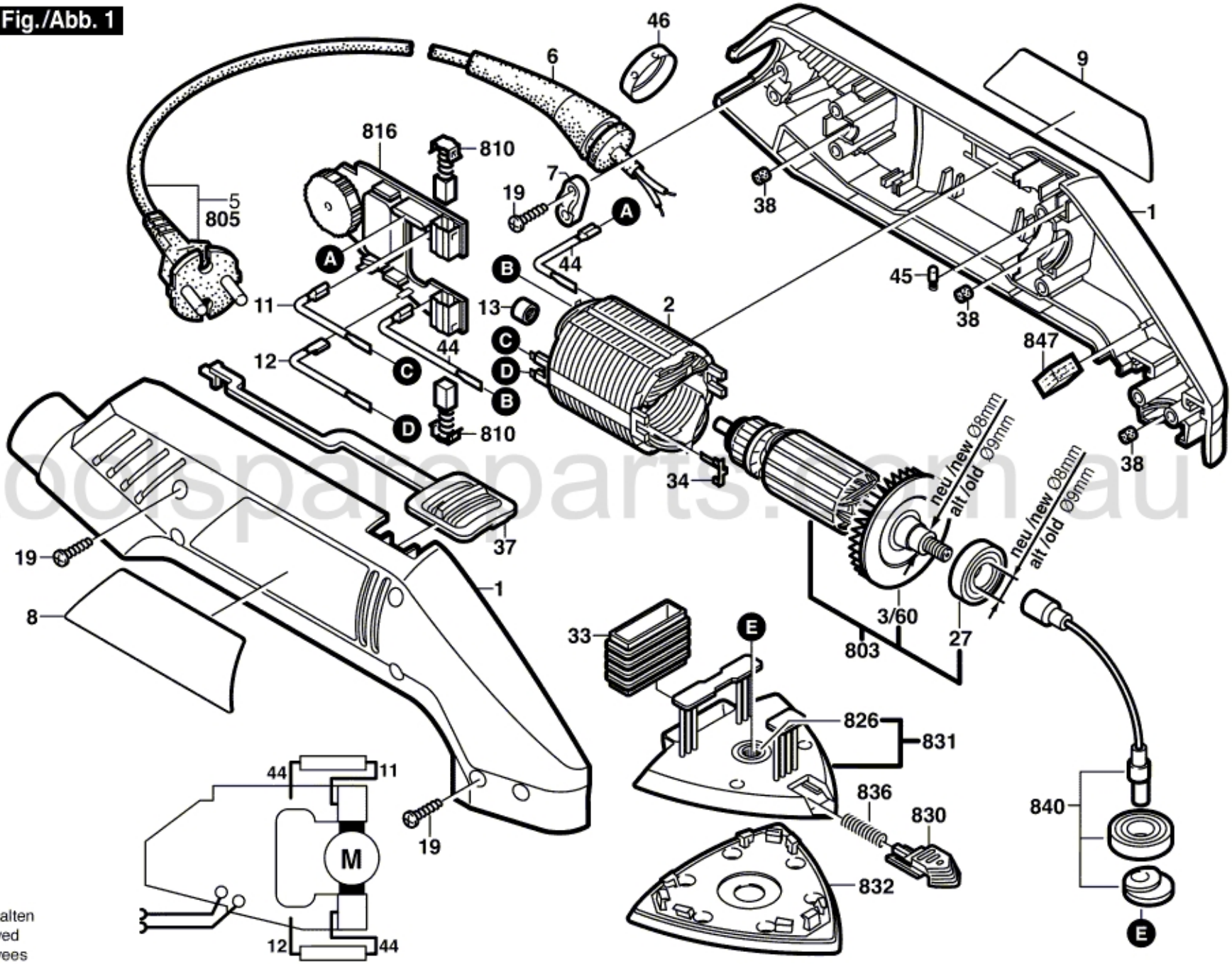

toolspareparts.com.au

Änderungen vorbehalten
Modifications reserved
Modifications reservees
Salvo modificaciones